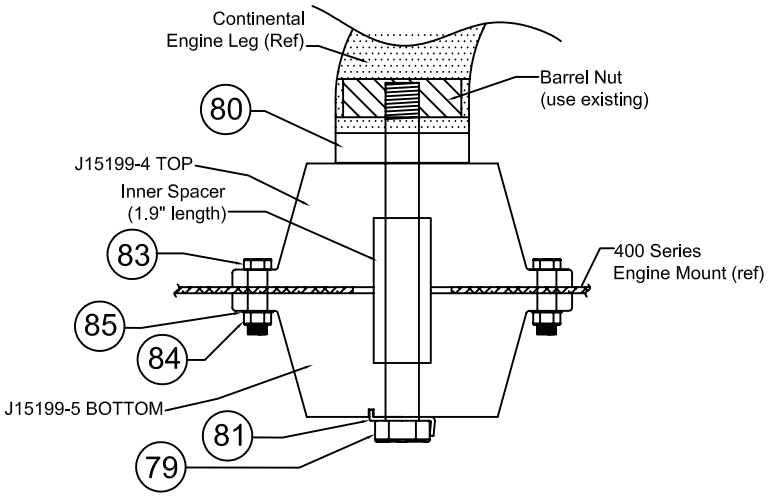

FWD POSITION

77 J15198–2 Lord Mount Assy
TYP 2 PLACES, ALL MOUNTS

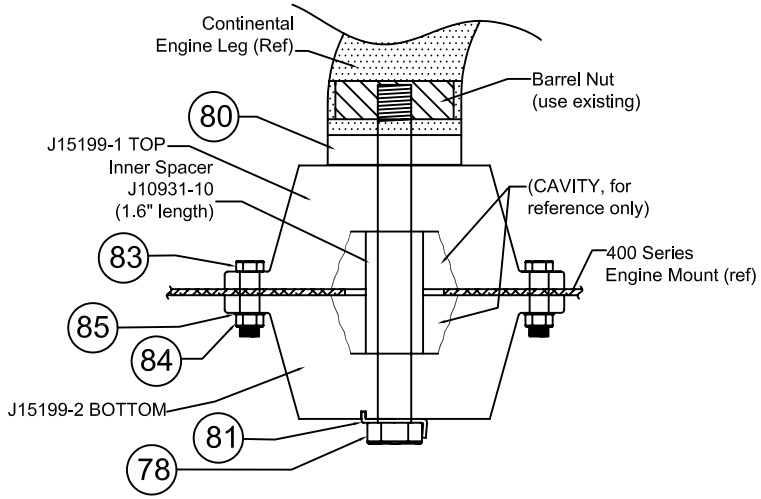

AFT POSITION

76 J15198–1 Lord Mount Assy
TYP 2 PLACES, ALL MOUNTS

Note: This drawing is furnished as an aid. Refer to Seaplanes West Inc. Drawing 100, Rev. A for approved data and references to specific call–outs.

QUANTITY PER ASSEMBLY	ITEM	PART/IDENTIFYING NUMBER	NOMENCLATURE/DESCRIPTION	VENDOR	MATERIAL/SPECIFICATION

UNLESS OTHERWISE SPECIFIED
1. DIMENSIONS ARE IN INCHES [MILLIMETRES].
2. REMOVE BURRS AND BREAK SHARP EDGES 0.020" RADIUS.
3. MINIMUM CORNER RADIUS 0.20".
4. MINIMUM 2D EDGE DISTANCE ON ALL FASTENERS.
5. TOLERANCES: DECIMALS .XX ±.03 .XXX ±.010; ANGULAR ±1°; SURFACE 125

INTERPRET TO ANSI Y14.5M

MANUFACTURER	CESSNA	DRAWN BY	J. SCHWERMAN 15-2-2007
MODEL	180 / 182 / 185	CHECKED BY	
ELIGIBILITY	SEE ELIGIBILITY TABLE	APPROVED BY	

NOTICE This drawing contains data, information and references that are proprietary to Seaplanes West Inc. This drawing, or any portion or view of this drawing, may not be reproduced, copied or disclosed in any manner, including computer and electronic methods, without the expressed written consent of Seaplanes West Inc. By accepting this drawing for reference, the recipient agrees to hold Seaplanes West Inc, and any employees, consultants or other parties retained by Seaplanes West in the preparation of this drawing, harmless from any liabilities arising from the use or misuse of this drawing, any associated data, and any associated information.

Seaplanes West Inc.
#61, 52210 RR 232
Sherwood Park, Alberta
Canada T8B 1B9

Lord Mount
Specific Detail
CESSNA 180 / 182 / 185, ALL

SIZE D | DWG. NO. J15198-1 & J15198-2 | REV.
SCALE: NTS | ATA: | SHEET:

15-02-2007 9:12 PM